DEWALT®

D25980

www.DEWALT.com

English *(original instructions)* 4

简体中文 10

Copyright DEWALT

Figure 1

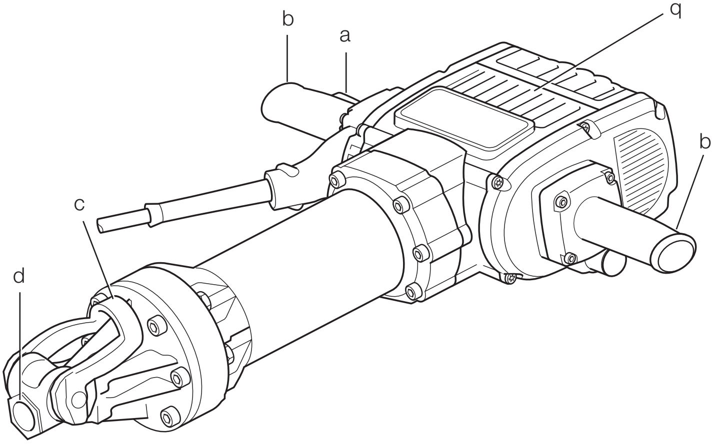

Figure 2

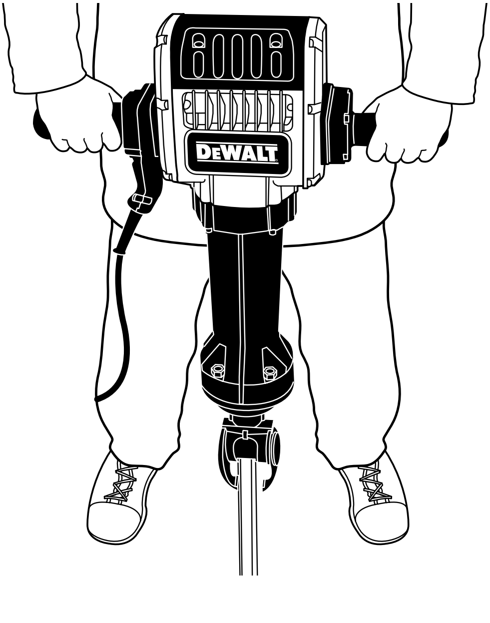

Figure 3

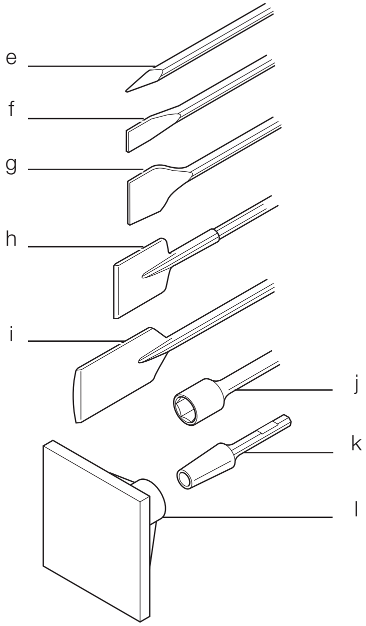

Figure 4

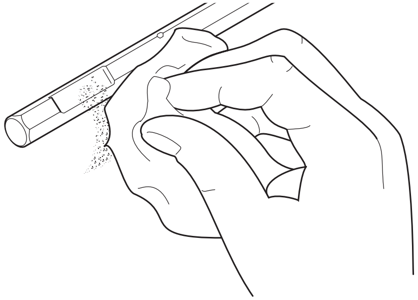

Figure 5

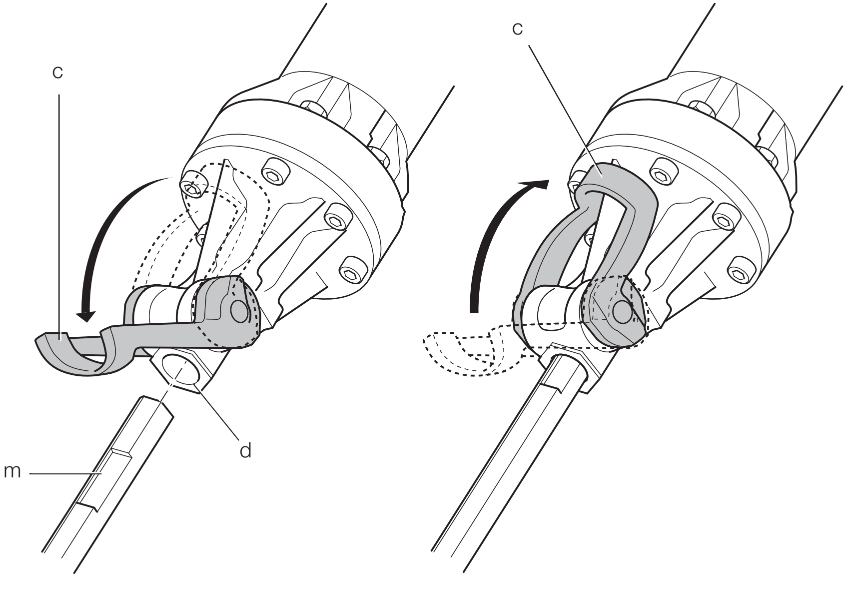

Figure 6

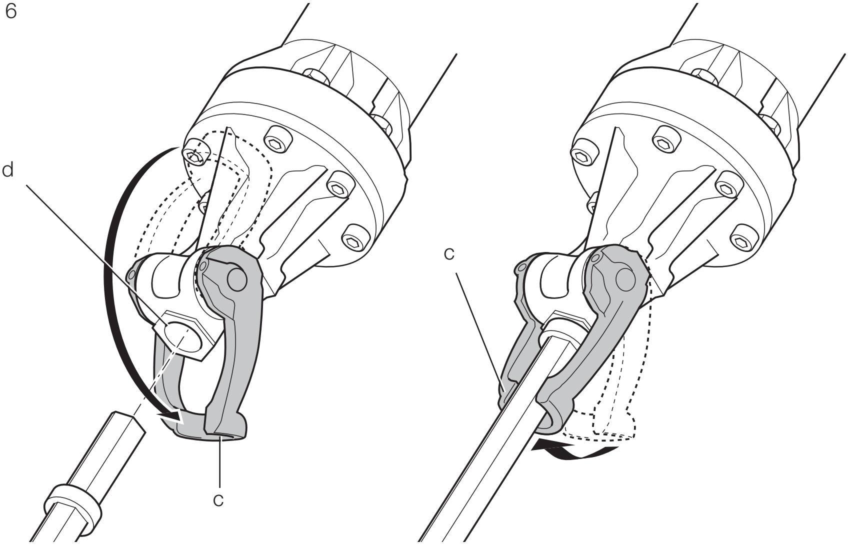

Figure 7

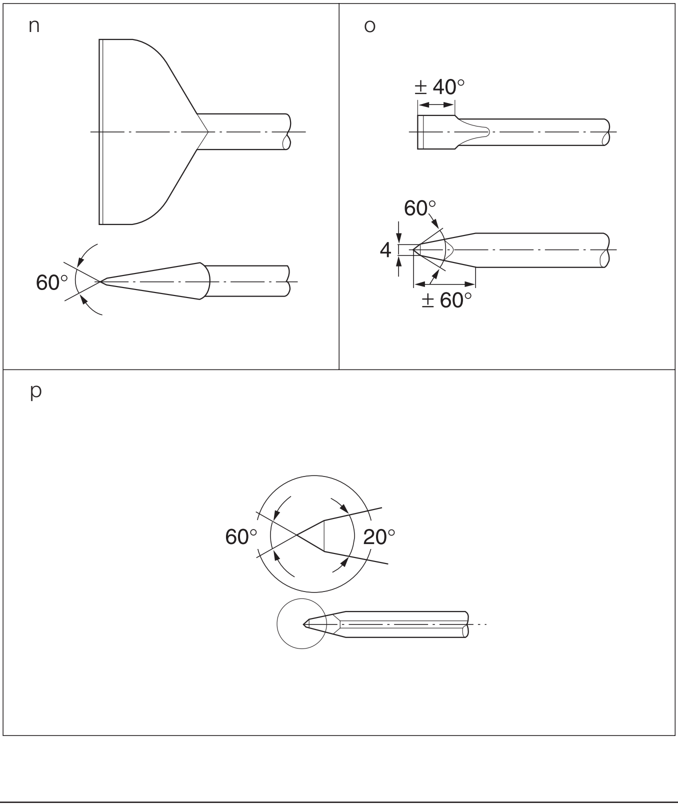

DEMOLITION HAMMER
D25980

Congratulations!

You have chosen a DEWALT tool. Years of experience, thorough product development and innovation make DEWALT one of the most reliable partners for professional power tool users.

Technical data

		D25980
Voltage	V	220-240
Frequency	Hz	50/60
Current	A	8.9/15.8
Power input	W	2100
Impact rate	min^{-1}	900
Impact energy (EPTA 05/2009)	J	52
Tool holder		28 mm hex
Weight	kg	31

Definitions: Safety Guidelines

The definitions below describe the level of severity for each signal word. Please read the manual and pay attention to these symbols.

DANGER: *Indicates an imminently hazardous situation which, if not avoided,* ***will*** *result in* ***death or serious injury****.*

WARNING: *Indicates a potentially hazardous situation which, if not avoided,* ***could*** *result in* ***death or serious injury****.*

CAUTION: *Indicates a potentially hazardous situation which, if not avoided,* ***may*** *result in* ***minor or moderate injury****.*

NOTICE: *Indicates a practice* ***not related to personal injury*** *which, if not avoided,* ***may*** *result in* ***property damage****.*

Denotes risk of electric shock.

Denotes risk of fire.

WARNING: *To reduce the risk of injury, read the instruction manual.*

General Power Tool Safety Warnings

WARNING! Read all safety warnings and instructions*. Failure to follow the warnings and instructions may result in electric shock, fire and/or serious injury.*

SAVE ALL WARNINGS AND INSTRUCTIONS FOR FUTURE REFERENCE

The term "power tool" in the warnings refers to your mains-operated (corded) power tool or battery-operated (cordless) power tool.

1) WORK AREA SAFETY

a) ***Keep work area clean and well lit.*** *Cluttered or dark areas invite accidents.*

b) ***Do not operate power tools in explosive atmospheres, such as in the presence of flammable liquids, gases or dust.*** *Power tools create sparks which may ignite the dust or fumes.*

c) ***Keep children and bystanders away while operating a power tool.*** *Distractions can cause you to lose control.*

2) ELECTRICAL SAFETY

a) ***Power tool plugs must match the outlet. Never modify the plug in any way. Do not use any adapter plugs with earthed (grounded) power tools.*** *Unmodified plugs and matching outlets will reduce risk of electric shock.*

b) ***Avoid body contact with earthed or grounded surfaces such as pipes, radiators, ranges and refrigerators.*** *There is an increased risk of electric shock if your body is earthed or grounded.*

c) ***Do not expose power tools to rain or wet conditions.*** *Water entering a power tool will increase the risk of electric shock.*

d) ***Do not abuse the cord. Never use the cord for carrying, pulling or unplugging the power tool. Keep cord away from heat, oil, sharp edges or moving parts.*** *Damaged or entangled cords increase the risk of electric shock.*

e) ***When operating a power tool outdoors, use an extension cord suitable for outdoor use.*** *Use of a cord suitable for outdoor use reduces the risk of electric shock.*

f) ***If operating a power tool in a damp location is unavoidable, use a residual current device (RCD) protected supply.***

Use of an RCD reduces the risk of electric shock.

3) PERSONAL SAFETY

a) ***Stay alert, watch what you are doing and use common sense when operating a power tool. Do not use a power tool while you are tired or under the influence of drugs, alcohol or medication.*** *A moment of inattention while operating power tools may result in serious personal injury.*

b) ***Use personal protective equipment. Always wear eye protection.*** *Protective equipment such as dust mask, non-skid safety shoes, hard hat, or hearing protection used for appropriate conditions will reduce personal injuries.*

c) ***Prevent unintentional starting. Ensure the switch is in the off position before connecting to power source and/or battery pack, picking up or carrying the tool.*** *Carrying power tools with your finger on the switch or energising power tools that have the switch on invites accidents.*

d) ***Remove any adjusting key or wrench before turning the power tool on.*** *A wrench or a key left attached to a rotating part of the power tool may result in personal injury.*

e) ***Do not overreach. Keep proper footing and balance at all times.*** *This enables better control of the power tool in unexpected situations.*

f) ***Dress properly. Do not wear loose clothing or jewellery. Keep your hair, clothing and gloves away from moving parts.*** *Loose clothes, jewellery or long hair can be caught in moving parts.*

g) ***If devices are provided for the connection of dust extraction and collection facilities, ensure these are connected and properly used.*** *Use of dust collection can reduce dust-related hazards.*

4) POWER TOOL USE AND CARE

a) ***Do not force the power tool. Use the correct power tool for your application.*** *The correct power tool will do the job better and safer at the rate for which it was designed.*

b) ***Do not use the power tool if the switch does not turn it on and off.*** *Any power tool that cannot be controlled with the switch is dangerous and must be repaired.*

c) ***Disconnect the plug from the power source and/or the battery pack from the power tool before making any adjustments, changing accessories, or storing power tools.*** *Such preventive safety measures reduce the risk of starting the power tool accidentally.*

d) ***Store idle power tools out of the reach of children and do not allow persons unfamiliar with the power tool or these instructions to operate the power tool.*** *Power tools are dangerous in the hands of untrained users.*

e) ***Maintain power tools. Check for misalignment or binding of moving parts, breakage of parts and any other condition that may affect the power tool's operation. If damaged, have the power tool repaired before use.*** *Many accidents are caused by poorly maintained power tools.*

f) ***Keep cutting tools sharp and clean.*** *Properly maintained cutting tools with sharp cutting edges are less likely to bind and are easier to control.*

g) ***Use the power tool, accessories and tool bits etc., in accordance with these instructions taking into account the working conditions and the work to be performed.*** *Use of the power tool for operations different from those intended could result in a hazardous situation.*

5) SERVICE

a) ***Have your power tool serviced by a qualified repair person using only identical replacement parts.*** *This will ensure that the safety of the power tool is maintained.*

Additional Specific Safety Rules for Demolition Hammers

- *Ensure the chisel is secured in place before operating the tool.*
- *In cold-weather conditions or when the tool has not been used for a longer period of time, let the tool run with no load for several minutes before use.*
- *Always hold the tool firmly with both hands and ensure a secure stance. Always operate the tool with the side handle properly mounted.*
- *When working above ground level ensure the area below is clear.*
- *To prevent electric shock, check the working area for live wires before operation.*
- *Do not touch the chisel or the parts close to the chisel immediately after operation, as they may be extremely hot and cause burns to the skin.*
- *Always direct the power cable to the rear, away from the chisel.*
- *Keep the power cable away from the accessory.*

A power cable wrapped around the bit may cause electric shock.

- *Do not wrap the power cable around your body.*
- *Do not allow inexperienced users to use this tool.*
- *Wear ear protectors. Exposure to noise can cause hearing loss.*
- *Use auxiliary handles supplied with the tool. Loss of control can cause personal injury.*
- *Hold power tool by insulated gripping surfaces, when performing an operation where the cutting accessory may contact hidden wiring or its own cord. Cutting accessory contacting a “live” wire may make exposed metal parts of the power tool “live” and could give the operator an electric shock.*
- *Do not strike jammed accessories with a hammer to dislodge them. Fragments of metal or material chips could dislodge and cause injury.*
- *Always switch off the tool when work is finished and before unplugging.*
- *Do not recondition accessories yourself. Chisel reconditioning should be done by a qualified specialist. Improperly reconditioned accessories could cause injury. Only slightly worn accessories can be resharpened by grinding.*

Residual Risks

The following risks are inherent to the use of demolition hammers:

– *Injuries caused by touching the hot parts of the tool.*

In spite of the application of the relevant safety regulations and the implementation of safety devices, certain residual risks cannot be avoided. These are:

– *Impairment of hearing.*

– *Risk of squeezing fingers when changing the accessory.*

– *Health hazards caused by breathing dust developed when working in concrete and/or masonry.*

– *Physical trauma due to inappropriate lifting and carrying of heavy equipment.*

Markings on Tool

The following pictograms are shown on the tool:

Read instruction manual before use.

Wear ear protection.

Wear eye protection.

DATE CODE POSITION (FIG. 1)

The Date Code (q), which also includes the year of manufacture, is printed into the housing.

Example:

2013 XX XX

Year of Manufacture

Package Contents

The package contains:

1 Demolition hammer

1 Instruction manual

- *Check for damage to the tool, parts or accessories which may have occurred during transport.*
- *Take the time to thoroughly read and understand this manual prior to operation.*

Description (fig. 1)

WARNING: *Never modify the power tool or any part of it. Damage or personal injury could result.*

a. On/off switch

b. Side handle(s)

c. Tool retainer

d. Tool holder

OPTIONAL ACCESSORIES (FIG. 3)

Various types of 28 mm hex. chisels are available as an option.

e. Pointed chisel (DT6927)

f. Cold chisel (DT6929)

g. Scaling tool (DT6932)

h. Spade chisel (DT6928)

i. Asphalt cutter (DT6934)

j. Driver ground rod (DT6933)

k. Shank tamper (DT6935)

l. Plate tamper (DT6936)

Consult your dealer for further information on the appropriate accessories.

INTENDED USE

D25980 demolition hammer has been designed for professional heavy duty demolition, chipping and chasing applications in concrete, brick, stone and other masonry materials.

DO NOT use under wet conditions or in presence of flammable liquids or gases.

These demolition hammers are professional power tools. **DO NOT** let children come into contact with the tool. Supervision is required when inexperienced operators use this tool.

Soft Start Feature

The soft start feature allows the impact rate to build up more slowly, thus preventing the chisel or point from "bouncing" around on the masonry when starting up.

Fully Vibration-dampened Handles (fig. 1)

The dampers in the handles (b) absorb the vibrations transmitted to the user. This improves user comfort during the operation.

Active Vibration Control

The active vibration control neutralises rebound vibration from the hammer mechanism. Lowering hand and arm vibration, it allows more comfortable use for longer periods of time and extends the life of the unit.

Electrical Safety

The electric motor has been designed for one voltage only. Always check that the power supply corresponds to the voltage on the rating plate.

Your DEWALT tool is double insulated in accordance with EN 60745; therefore no earth wire is required.

WARNING: *115 V units have to be operated via a fail-safe isolating transformer with an earth screen between the primary and secondary winding.*

If the supply cord is damaged, it must be replaced by a specially prepared cord available through the DEWALT service organization.

Using an Extension Cable

If an extension cable is required, use an approved 3–core extension cable suitable for the power input of this tool (see ***Technical Data***).The minimum conductor size is 1.5 mm^2; the maximum length is 30 m.

When using a cable reel, always unwind the cable completely.

ASSEMBLY AND ADJUSTMENTS

WARNING: To reduce the risk of injury, turn unit off and disconnect machine from power source *before installing and removing accessories, before adjusting or changing set-ups or when making repairs. Be sure the trigger switch is in the OFF position. An accidental start-up can cause injury.*

Inserting And Removing 28 mm Hex Accessories (fig. 4–6)

This machine uses chisels with a 28 mm hex. shank. We recommend to use professional accessories only.

WARNING: *Since accessories other than those offered by DEWALT have not been tested with this product, the use of such accessories may entail hazardous situations. To reduce the risk of injury, use only accessories recommended by DEWALT.*

Clean the chisel shank.

WARNING: *Do not apply lubricant to the machine.*

TO FIT A CHISEL WITH GROOVE IN THE SHANK, PROCEED AS FOLLOWS (FIG. 5)

1. Pull the tool retainer (c) to the unlock position.
2. Hold the chisel in front of the tool holder with the groove (m) facing upwards.
3. Insert the chisel shank into the tool holder (d).
4. Push the retainer (c) backwards to lock the accessory in position.

TO FIT A CHISEL WITH COLLAR ON THE SHANK, PROCEED AS FOLLOWS (FIG. 6)

1. Pull the tool retainer (c) to the unlock position.
2. Insert the chisel shank into the tool holder (d).
3. Push the retainer (c) in line with the accessory shank to lock the accessory in position.
4. Pull on the chisel to check if it is properly locked. The hammering function requires the chisel to be able to move axially several centimetres when locked in the tool holder.

To remove a chisel pull back the retainer (c) and pull the chisel out of the tool holder.

WARNING: *Always wear gloves when you change accessories. The exposed metal parts on the tool and accessory may become extremely hot during operation.*

OPERATION

Instructions for Use

WARNING:

- *Always observe the safety instructions and applicable regulations.*
- *Be aware of the location of pipework and wiring.*
- *Apply a pressure of approx. 20–30 kg to the tool. Excessive force does not speed up chiselling but decreases tool performance and may shorten tool life.*

Proper Hand Position (fig. 1, 2)

WARNING: *To reduce the risk of serious personal injury,* ***ALWAYS*** *use proper hand position as shown.*

WARNING: *To reduce the risk of serious personal injury,* ***ALWAYS*** *hold securely in anticipation of a sudden reaction.*

Proper hand position requires one hand on each side handle (b).

Switching On and Off (fig. 1)

To run the tool, press the on/off switch (a).

To stop the tool, release the switch.

Demolition, Chasing and Channelling (fig. 1–6)

1. Select the appropriate chisel and clean its shank.
2. Insert the chisel and check whether it is properly locked.
3. Hold of the tool at both handles (b) and turn on. The tool now runs in continuous operation.

MAINTENANCE

Your DEWALT power tool has been designed to operate over a long period of time with a minimum of maintenance. Continuous satisfactory operation depends upon proper tool care and regular cleaning.

WARNING: To reduce the risk of injury, turn unit off and disconnect machine from power source *before installing and removing accessories, before adjusting or changing set-ups or when making repairs. Be sure the trigger switch is in the OFF position. An accidental start-up can cause injury.*

This machine is not user-serviceable. Take the tool to an authorised DEWALT repair agent after approximately 200 hours of use.

If problems occur before this time contact an authorised DEWALT repair agent.

Lubrication

Your power tool requires no additional lubrication.

Cleaning

WARNING: *Blow dirt and dust out of the main housing with dry air as often as dirt is seen collecting in and around the air vents. Wear approved eye protection and approved dust mask when performing this procedure.*

WARNING: *Never use solvents or other harsh chemicals for cleaning the non-metallic parts of the tool. These chemicals may weaken the materials used in these parts. Use a cloth dampened only with water and mild soap. Never let any liquid get inside the tool; never immerse any part of the tool into a liquid.*

Optional Accessories

WARNING: *Since accessories, other than those offered by DEWALT, have not been tested with this product, use of such accessories with this tool could be hazardous. To reduce the risk of injury, only DEWALT, recommended accessories should be used with this product.*

WARNING: *These chisels can be reground only a limited number of times. If in doubt, contact your dealer for recommendations.*

WARNING: *Ensure that the cutting edge does not show discolouration caused by too much pressure. This may impair the hardness of the accessory.*

Accessory Maintenance

Accessory maintenance at the right time guarantees optimal results in application and a long and efficient accessory life.

Grind the chisels on grinding discs. Refer to figure 7 for the appropriate angles of the following chisels:

n. spade-shaped chisel

o. cold chisel

p. pointed chisel

Consult your dealer for further information on the appropriate accessories.

Protecting the Environment

Separate collection. This product must not be disposed of with normal household waste.

Should you find one day that your DEWALT product needs replacement, or if it is of no further use to you, do not dispose of it with household waste. Make this product available for separate collection.

Separate collection of used products and packaging allows materials to be recycled and used again. Re-use of recycled materials helps prevent environmental pollution and reduces the demand for raw materials.

Local regulations may provide for separate collection of electrical products from the household, at municipal waste sites or by the retailer when you purchase a new product.

DEWALT provides a facility for the collection and recycling of DEWALT products once they have reached the end of their working life. To take advantage of this service please return your product to any authorised repair agent who will collect them on our behalf.

You can check the location of your nearest authorised repair agent by contacting your local DEWALT office at the address indicated in this manual. Alternatively, a list of authorised DEWALT repair agents and full details of our after-sales service and contacts are available on the Internet at: **www.2helpU.com**.

电镐
D25980

恭喜！

感谢您选购 DEWALT 工具。凭借多年的产品开发和创新经验，DEWALT 已经成为专业电动工具用户最可靠的合作伙伴之一。

技术数据

		D25980
电压	伏特	220V
频率	赫兹	50Hz
输入功率	瓦	2100
冲击率	转/分	900
冲击能量	焦	52
镐头类型		28 毫米六角形
重量	千克	31

定义：安全指引

下列定义描述了各警示词的严重程度。请仔细阅读本手册，并注意这些警示符号。

危险：*表示存在紧急危险情况，如果不加以避免，***将***导致****死亡或严重伤害***。*

警告：*表示存在潜在的危险情况，如果不加以避免，***可能***导致****死亡或严重伤害***。*

警示：*表示存在潜在危险情况，如果不加以避免，***可能***导致****轻度或中度伤害***。*

注意：*表示***存在不涉及人身伤害的情况，***如果不加以避免，***可能***导致****财产损失***。*

表示存在触电危险。

表示存在火灾风险。

警告：*为降低伤害风险，请阅读使用手册。*

电动工具通用安全警告

警告！阅读所有警告和所有说明。*不遵照以下警告和说明会导致电击、着火和／或严重伤害。*

保存所有警告和说明书以备查阅。

在所有下列的警告中术语“电动工具”指市电驱动（有线）电动工具或电池驱动（无线）电动工具。

a) 工作场地的安全

1) ***保持工作场地清洁和明亮。****混乱和黑暗的场地会引发事故。*
2) ***不要在易爆环境，如有易燃液体、气体或粉尘的环境下操作电动工具。****电动工具产生的火花会点燃粉尘或气体。*
3) ***让儿童和旁观者离开后操作电动工具。****注意力不集中会使你失去对工具的控制。*

b) 电气安全

1) ***电动工具插头必须与插座相配。绝不能以任何方式改装插头。需接地的电动工具不能使用任何转换插头。****未经改装的插头和相配的插座将减少电击危险。*
2) ***避免人体接触接地表面，如管道、散热片和冰箱。****如果你身体接地会增加电击危险。*
3) ***不得将电动工具暴露在雨中或潮湿环境中。****水进入电动工具将增加电击危险。*
4) ***不得滥用电线。绝不能用电线搬运、拉动电动工具或拔出其插头。使电线远离热源、油、锐边或运动部件。****受损或缠绕的软线会增加电击危险。*
5) ***当在户外使用电动工具时，使用适合户外使用的外接软线。****适合户外使用的软线将减少电击危险。*
6) ***如果在潮湿环境下操作电动工具是不可避免的，应使用剩余电流动作保护器（RCD）。****使用RCD可减小电击危险。*

c) 人身安全

1) ***保持警觉，当操作电动工具时关注所从事的操作并保持清醒。当你感到疲倦，或在有药物、酒精或治疗反应时，不要操作电动工具。****在操作电动工具时瞬间的疏忽会导致严重人身伤害。*

2) ***使用个人防护装置。始终佩戴护目镜。****安全装置，诸如适当条件下使用防尘面具、防滑安全鞋、安全帽、听力防护等装置能减少人身伤害。*

3) ***防止意外起动。确保开关在连接电源和/或电池盒、拿起或搬运工具时处于关断位置。****手指放在已接通电源的开关上或开关处于接通时插入插头可能会导致危险。*

4) ***在电动工具接通之前，拿掉所有调节钥匙或扳手。****遗留在电动工具旋转零件上的扳手或钥匙会导致人身伤害。*

5) ***手不要伸展得太长。时刻注意立足点和身体平衡。****这样在意外情况下能很好地控制电动工具。*

6) ***着装适当。不要穿宽松衣服或佩戴饰品。让你的衣服、手套和头发远离运动部件。****宽松衣服、佩饰或长发可能会卷入运动部件中。*

7) ***如果提供了与排屑、集尘设备连接用的装置，要确保他们连接完好且使用得当。****使用这些装置可减少尘屑引起的危险。*

d) 电动工具使用和注意事项

1) ***不要滥用电动工具，根据用途使用适当的电动工具。****选用适当设计的电动工具会使你工作更有效、更安全。*

2) ***如果开关不能接通或关断工具电源，则不能使用该电动工具。****不能用开关来控制的电动工具是危险的且必须进行修理。*

3) ***在进行任何调节、更换附件或贮存电动工具之前，必须从电源上拔掉插头和／或使电池盒与工具脱开。****这种防护性措施将减少工具意外起动的危险。*

4) ***将闲置不用的电动工具贮存在儿童所及范围之外，并且不要让不熟悉电动工具或对这些说明不了解的人操作电动工具。****电动工具在未经培训的用户手中是危险的。*

5) ***保养电动工具。检查运动件是否调整到位或卡住，检查零件破损情况和影响电动工具运行的其他状况。如有损坏，电动工具应在使用前修理好。****许多事故由维护不良的电动工具引发。*

6) ***保持切削刀具锋利和清洁。****保养良好的有锋利切削刃的刀具不易卡住而且容易控制。*

7) ***按照使用说明书，考虑作业条件和进行的作业来使用电动工具、附件和工具的刀头等。****将电动工具用于那些与其用途不符的操作可能会导致危险。*

e) 检修

a) ***将你的电动工具送交专业维修人员，使用同样的备件进行修理。****这样将确保所维修的电动工具的安全性。*

电镐特定安全附加规则

- *操作工具前请确保凿子固定到位。*
- *在寒冷天气中或在长时间不使用工具时，使用前应让工具空载运转数分钟。*
- *务必用双手紧握工具并确保站稳。务必在正确安装侧手柄后才操作工具。*
- *在高于地面的位置操作时，请确保操作的下方区域无障碍。*
- *为了防止触电，操作工具前请检查工作区的带电导线。*
- *在操作后不得立即碰触凿子或靠近凿子的部件，它们可能非常热且会导致皮肤灼伤。*
- *始终将电缆放在后面，远离凿子。*
- *请使电缆远离附件。电缆缠绕钻头可能会导致触电。*
- ***戴好耳罩。****暴露在噪声中会引起听力损伤。*
- ***使用随工具提供的辅助手柄。****操作失手会引起人身伤害。*
- ***在切削附件可能触及暗线或其自身软线之处进行操作时，要通过绝缘握持面来握持工具。****切削附件碰到带电导线会使工具外露的金属零件带电从而使操作者受到电击。*

- *请勿使电缆缠绕住您的身体。*
- *请勿允许缺乏经验的使用者操作本工具。*
- *请佩戴听力保护器。噪音会损伤听力。*
- *请使用电镐随附的辅助手柄。工具失控会导致人身伤害。*
- *若切割附件在进行操作时可能会接触到暗线或自身电源线，则操作人员需通过绝缘握持面来握住电动工具。若切削配件接触到“带电”导线，电动工具金属部件表面就会“带电”，从而导致操作人员触电。*
- *请勿使用锤子击打卡住的附件使其卸下。金属碎片或材料碎屑可能会弹出而导致伤害。*
- *作业结束后，务必先关闭工具开关，然后再拔下工具插头。*
- *切勿自行整修附件。附件的整修工作应由合格专业人员来完成。附件整修不当可能会导致伤害。仅轻度磨损的附件可通过打磨进行磨尖。*
- *请务必选择使用符合国家标准要求的16A插座。*

剩余风险

使用电锤时具有下列固有危险：

– *碰触工具带热的部件会导致人身伤害。*

尽管遵守了相关的安全法规并采用了安全装备，某些剩余风险仍然是无法避免的。这些风险包括：

– *听力损伤。*

– *更换附件时扭伤手指的风险。*

– *在混凝土和/或砖石环境中工作时，吸入粉尘导致的健康危害。*

– *由于不正确举抬和搬动重型设备而导致的身体创伤。*

工具上的标记

工具上印有下列标志：

使用前请阅读使用手册。

请佩戴听力保护器。

请佩戴护目装备。

日期码位置（图 1）

日期码 (q) 印在工具外壳上，其中还包含制造年份。

例如：

2013 XX XX

制造年份

包装内容

本产品包装内含有：

电镐 1 个

使用手册 1 本

- *检查工具、部件或附件是否在运输过程中损坏。*
- *操作前，请抽空仔细阅读并掌握本手册。*

描述（图 1）

警告： *切勿改装电动工具或其任何部件，否则可能会导致损坏或人身伤害。*

a. “开/关”开关

b. 侧手柄

c. 工具支承架

d. 工具夹持器

可选配件（图 3）

备有各种类型 28 毫米六角凿子选件供选择。

e. 尖凿 (DT6927)

f. 冷凿 (DT6929)

g. 铲刮工具 (DT6932)

h. 铲凿 (DT6929)

i. 沥青面层切割刀 (DT6934)

j. 起子接地棒 (DT6933)

k. 夯压棒 (DT6935)

l. 夯压板 (DT6935)

请向您的经销商咨询更多关于合适附件的信息。

设计用途

D25980 电镐设计用于在混凝土、砖块、石头和其他砖石材料上进行专业的重载破拆、切削和凿削应用。

请勿在潮湿环境中或在有易燃液体或气体的环境中使用。

本电镐是专业型电动工具。**请勿**让儿童接触本工具。缺乏经验的操作员需要在监督下使用此工具。

软启动功能

软启动功能使冲击率更缓慢地递增，从而防止启动时凿子或尖端在砖石上“振跳”。

减震手柄（图 1）

手柄 (b) 上减震层承受了传递至使用者的震动，提高使用者在操作过程中的舒适感。

有源震动控制

有源振动控制可中和来自锤子机制的回弹震动。降低手部和手臂震动，允许更舒适地在更长的时间内使用本工具，并延长装置的使用寿命。

电气安全

电机只适用一种工作电压。请务必检查电源电压是否与铭牌上的电压一致。

电源线损坏时，必须由 DEWALT 服务部门采用专门制备的电线进行更换。

使用延长电缆

如需使用延长电缆，请使用与本工具的输入电源（见***技术参数***）相符且经检验的 3 芯延长电缆。导体的最小尺寸为 1.5 平方毫米，最大长度为 30 米。

使用电缆卷筒时，请务必拉出所有的电缆。

组装和调整

警告：为降低人身伤害的风险，在拆、装附件或调整、修理工具之前，*请关闭工具并拔下工具插头。请确保触发开关处于关闭位置。意外启动可能会导致人身伤害。*

插入和卸下 28 毫米六角形附件（图 4–6）

本工具使用 28 毫米六角形凿杆的凿子，建议对本工具仅使用专业附件。

警告：*非 DEWALT 供应的附件未经本产品匹配测试，因而使用此类附件可能会造成危险。为降低人身伤害风险，请仅使用 DEWALT* ***推荐的附件****。*

警告：*切勿在机器上使用润滑剂。*

要装套凿杆带凹槽的凿子，请按如下步骤操作（图 5）

1. 将定位器 (c) 拉出至解锁位置。
2. 握持住凿子，置于工具夹持器前，并使凹槽 (m) 朝上。
3. 将凿杆插入工具夹持器 (d)。
4. 将定位器 (c) 往回拨以将附件锁定到位。

要装套凿杆带轴环的凿子，请按如下步骤操作（图 6）

1. 将定位器 (c) 拉出至解锁位置。
2. 将凿杆插入工具夹持器 (d)。
3. 将定位器 (c) 推到接合附件杆的位置以将附件锁定到位。
4. 拉动凿子以检查它是否正确锁定。锤打功能需要凿子在锁定到工具夹持器中时可以轴向移动数厘米。

要卸下凿子，请向后拉定位器 (c)，然后将凿子从工具夹持器中拉出。

警告：*更换附件时请务必佩戴手套。工具和附件上的裸露金属部分可能会在操作过程中变得非常热。*

操作

使用说明

警告：

- *请始终遵守安全守则以及适用规则的要求。*
- *注意水管和电线的布线位置。*
- *对工具施加约 20–30 千克的压力。过度用力不会加快凿切，反而会降低工具性能并可能缩短工具使用寿命。*

正确的手持方式（图 1、2）

警告：*为降低严重的人身伤害风险，请****始终****使用正确的手持方式，如图所示。*

警告：*为降低严重的人身伤害风险，预见到突发反冲时****务必****紧握住工具。*

正确的手部位置要求双手分别握住两边的侧手柄 (b)。

启动与关闭（图 1）

要运转工具，请按下开关 (a)。

如果要停止工具，请放开开关。

破坏、雕镂和凿槽作业（图 1–6）

1. 选择适当的凿子，并清洁凿杆。
2. 插入凿子并检查它是否正确锁定到位。
3. 用双手紧握两个手柄 (b) 并打开电源。工具现已连续操作运行。

维护

DEWALT 电动工具设计精良，可以长期使用，而且只需最少的维护。要连续获得令人满意的工作效果，需要进行合适的工具维护和定期清洁。

警告：为降低人身伤害的风险，在拆、装附件或调整、修理工具之前，*请关闭工具并拔下工具插头。请确保触发开关处于关闭位置。意外启动可能会导致人身伤害。*

本工具不允许用户自行维修。在使用大约 200 小时后，请将工具交由 DEWALT 授权维修代理进行检修。

如果在此之前工具发生任何问题，请联系 DEWALT 授权维修代理。

润滑

本电动工具无需另行润滑。

清洁

警告：*一旦通风口和周围积聚了可见的粉尘，请立即用干燥的空气吹走主机外壳内的粉尘和灰尘。执行此过程时，需戴上经认可的护目装备和防尘面具。*

警告：*切勿使用溶剂或其他烈性化学制品来清洁工具的非金属部件。这些化学物质可能会削弱这些部位使用的材料。请用布蘸温和的肥皂水擦拭。切勿让任何液体渗入工具，切勿让工具的任何部分浸在液体中。*

可选附件

警告：*除了 DEWALT 提供的附件之外，其他附件都未经此产品兼容性测试，若将此类附件与本工具一起使用将存在安全隐患。为降低人身伤害风险，本产品只可使用 DEWALT 推荐的附件。*

***警告：**这些凿子只能重新接地数次。若有疑问，请联络您的代理商以获得建议。*

***警告：**确保刀刃不会因为过度压力而变色。这可能影响附件的硬度。*

附件保养

在正确时间进行附件保养，可确保应用的最佳结果以及长而有效的附件寿命。

用磨片研磨凿子。请参阅图 7 以获得下列凿子的适当角度：

n. 扁形凿

o. 冷凿

p. 尖凿

请向您的经销商咨询更多关于合适附件的信息。

保护环境

分类回收。本产品不得与普通家庭垃圾一起处理。

如果您发现您的 DEWALT 产品需要更换或您已经不再需要使用这些产品，请不要将它们与家庭垃圾一起处理。请将它们单独分类回收。

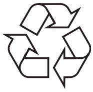

分类回收使用过的产品和包装能够让材料得以再循环和再利用。回收材料的再利用有助于防止环境污染，并降低对原材料的需求。

当地法规可能要求由市政废物处理点或向您出售新产品的零售商提供从家庭中分类回收电气产品的服务。

DEWALT 提供设施收集和回收使用寿命到期的 DEWALT 产品。若要享受这项服务，请将产品送回任一授权维修代理，他们将代表我们回收您的产品。

请根据本手册所提供的地址与当地 DEWALT 办事处联系，查询离您最近的授权维修代理的位置。或者，您也可以登陆以下网站查询 DEWALT 授权维修代理名单，以及我们的售后服务和联系方式的详细信息，网址是：**www.2helpU.com**。

制造商：百得德国公司

地　址：Black & Decker Str. 40 65510 Idstein, 德国

产　地：意大利